Cover Removed

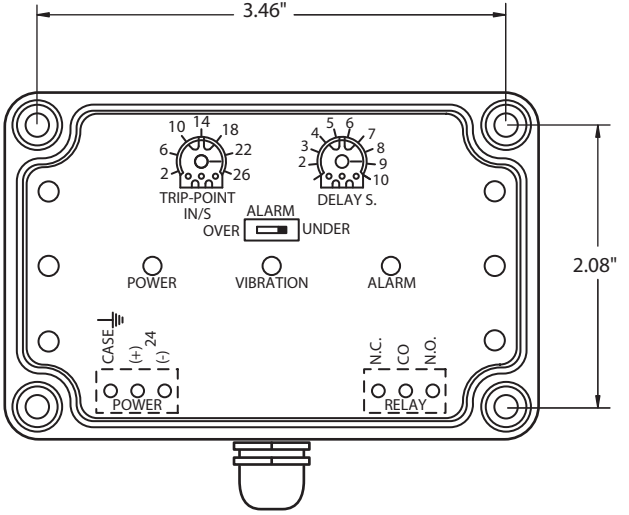
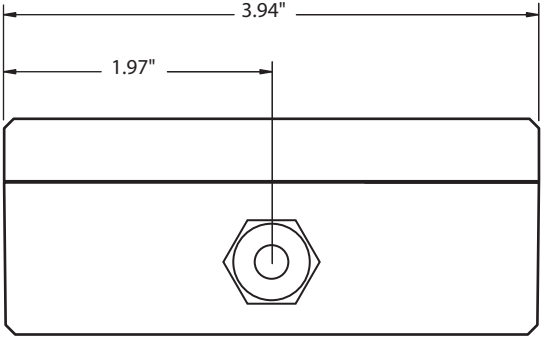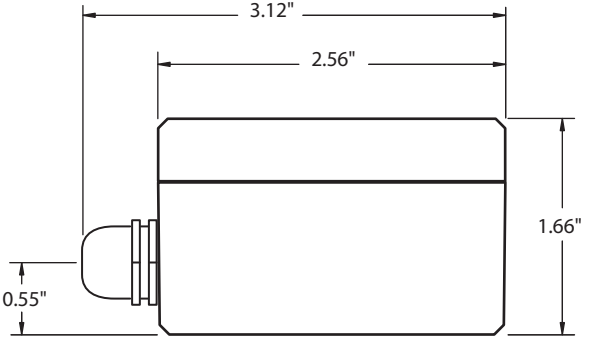
Cover Attached